MFJ

RF Sense SDR Receiver
TR Antenna Switch

Model MFJ-1708B-SDR
Model MFJ-1708B-SDRS

INSTRUCTION MANUAL

CAUTION: Read All Instructions Before Operating Equipment

MFJ ENTERPRISES, INC.

300 Industrial Park Road
Starkville, MS 39759 USA
Tel: 662-323-5869 Fax: 662-323-6551

VERSION 0A

COPYRIGHT © 2018 MFJ ENTERPRISES, INC.

The MFJ-1708B-SDR and the MFJ-1708B-SDRS are RF sensed TR switches with a receive splitter designed to be used with a transceiver and a separate receiver such as the popular SDR receivers. The splitter give high isolation between the transceiver and SDR Receive port to reduce crosstalk and interference between the two ports. The SDR port has a protection circuit to help prevent damage from transmit RF. The MFJ-1708B-SDR has a Stripline PCB reducing the SWR up through 450MHz and improved isolation for better receiver protection.
MFJ-1708B-SDRS has an SMA connector for ease of connection to SDR dongle receivers.

Features

- RF Sensing for radios that do not have a keying output when transmitting.
- Good isolation between transmit and receive ports.
- Excellent isolation between Transceiver and SDR Receive ports.
- Good SWR characteristics up to 450MHz.
- Receiver protection circuit to limit any transmit RF spikes.
- Control Line input for radios that have a key line output.
- An AUX output that can be set to ground to receive or ground to transmit.
- Power off bypass sets the transceiver to the antenna.
- Adjustable receive delay 50ms to 4 seconds.

Connections and Controls

- REC Connection for the receiver.
- ANT Connection to the antenna.
- XCVR Connection to the transceiver.
- AUX Connection to the receiver mute terminal.
- CTRL Connection to the transmitter PTT or KEY line.
- +12V Power Connector
- DELAY Receive delay adjustment.

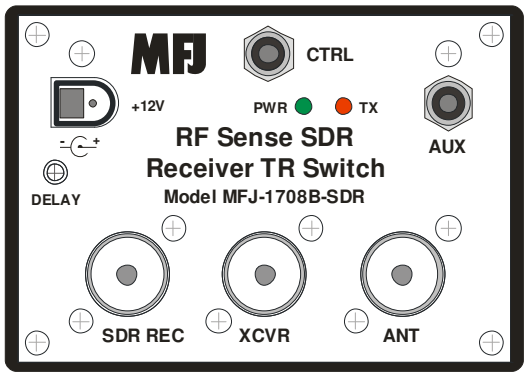

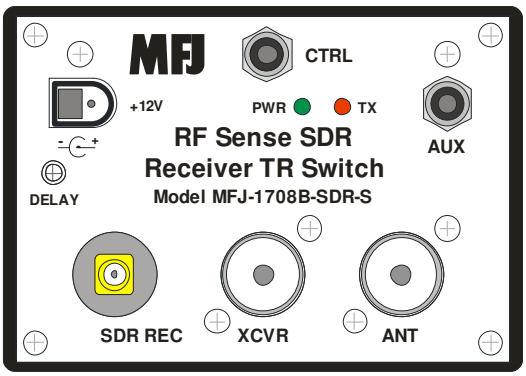

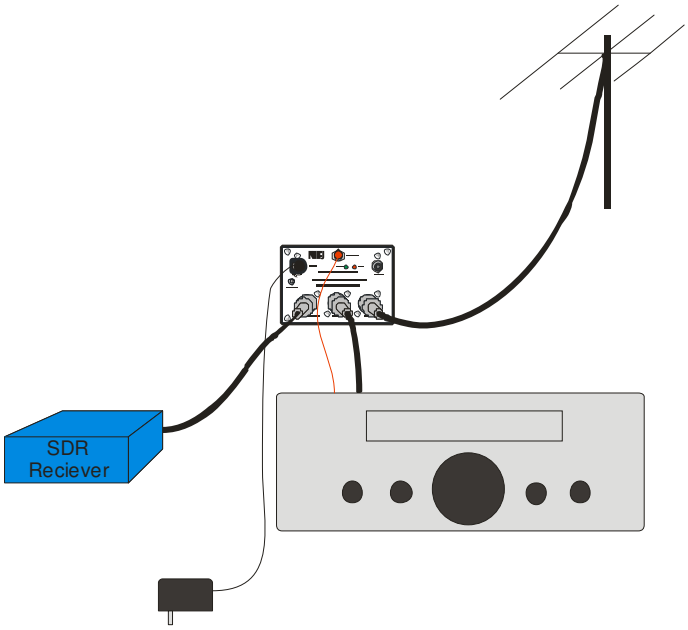

1. Connect the transceiver to the XCVR connector.
2. Connect the antenna, antenna tuner, or linear amplifier input to the ANT connector.
3. Connect the SDR or second receiver to the SDR REC connector. DO NOT TRANSMIT into the SDR REC input.
4. The CTRL terminal may be used in place of or in addition to the RF sensing circuit by connecting to the output to key a linear amplifier to energize the MFJ-1708B-SDR.
5. If a linear is used then connect the AUX output to the jack that keys the transmitter. Set the jumper JP1 to ground when keyed.
6. Connect a 12V DC power source to the power terminal. The MFJ-1312D is ideal for the MFJ-1708D.
7. The DELAY control is used to adjust the time it takes to go back to receive. Full CCW is minimum delay which is around 40-50ms. Full CW is maximum which is around 2-4 seconds.

Note Do Not use the MFJ-1708B-SDR with transmitters over 200W or place it on the output of linear amplifiers over 200W. If the MFJ-1708B-SDR is used in conjunction with a linear amplifier place it in between the amplifier and the exciter. The AUX connection can be used to key the amplifier and the output from the exciter can be connected to the CTRL connector. In this mode there will not be a mute connection for the receiver.

At VHF and UHF frequencies the transmit SWR and receive losses can be improved by removing the jumper JP2 if the RF Sense function is not required. In this case the CTRL connector is required to be connected to a key line out of the transmitter.

Board Jumpers

JP1 Left for GROUND to RECEIVE, Right for UNGROUND to RECEIVE

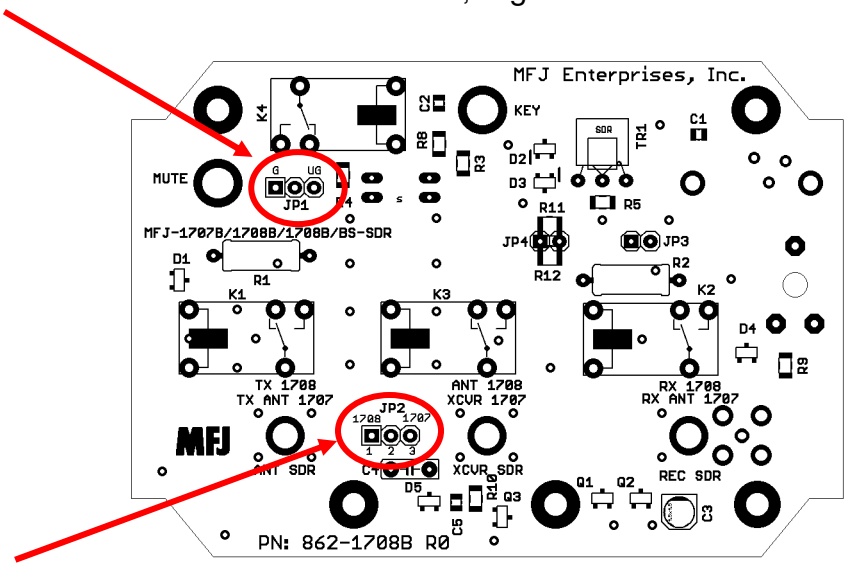

JP2 Left for RF Sense, Remove for no RF Sense.

Schematic

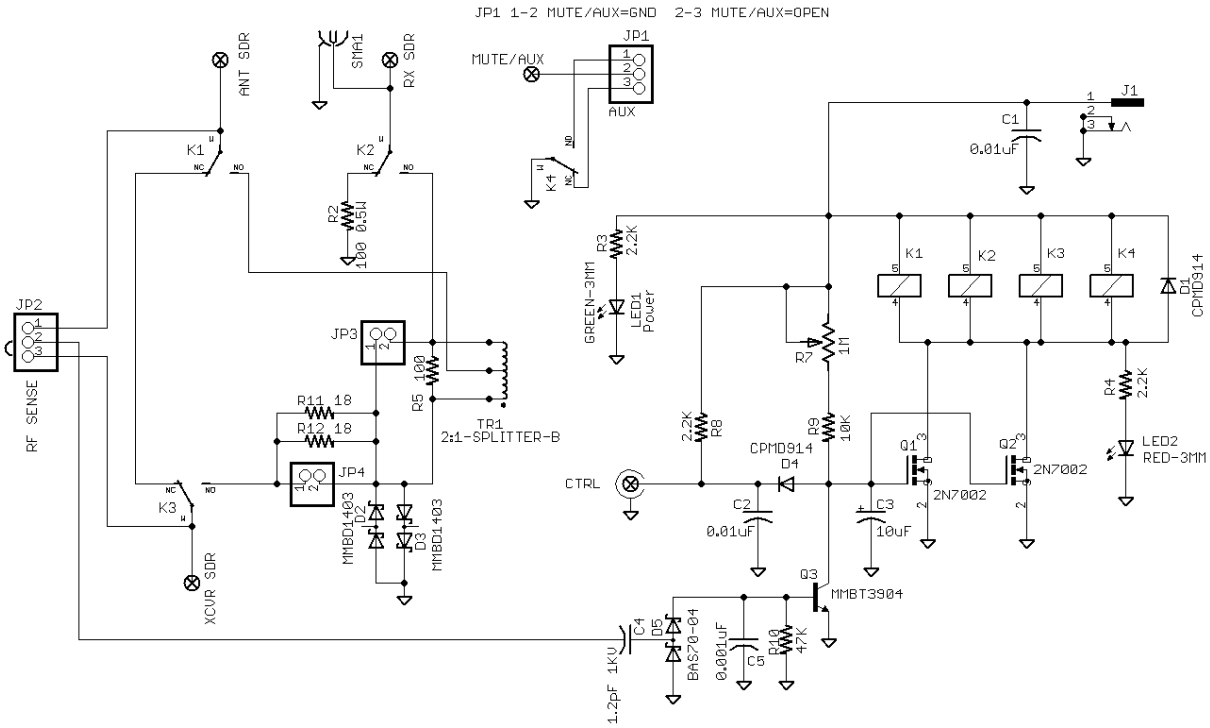

Technical Assistance

If you have any problem with this unit first check the appropriate section of this manual. If the manual does not reference your problem or your problem is not solved by reading the manual you may call *MFJ Technical Service* at **662-323-0549** or the *MFJ Factory* at **662-323-5869**. You will be best helped if you have your unit, manual and all information on your station handy so you can answer any questions the technicians may ask.

You can also send questions by mail to MFJ Enterprises, Inc., 300 Industrial Park Road, Starkville, MS 39759; by Facsimile to 662-323-6551; or by email to techinfo@mfjenterprises.com. Send a complete description of your problem, an explanation of exactly how you are using your unit, and a complete description of your station.

NOTES

FULL 12-MONTH WARRANTY

MFJ Enterprises, Inc. warrants to the original owner of this product, if manufactured by MFJ Enterprises, Inc. and purchased from an authorized dealer or directly from MFJ Enterprises, Inc. to be free from defects in material and workmanship for a period of 12 months from date of purchase provided the following terms of this warranty are satisfied.

1. The purchaser must retain the dated proof-of-purchase (bill of sale, canceled check, credit card or money order receipt, etc.) describing the product to establish the validity of the warranty claim and submit the original or machine reproduction of such proof of purchase to MFJ Enterprises, Inc. at the time of warranty service. MFJ Enterprises, Inc. shall have the discretion to deny warranty without dated proof-of-purchase. Any evidence of alteration, erasure, of forgery shall be cause to void any and all warranty terms immediately.

2. MFJ Enterprises, Inc. agrees to repair or replace at MFJ's option without charge to the original owner any defective product provided the product is returned postage prepaid to MFJ Enterprises, Inc. with a personal check, cashiers check, or money order for **$12.00** covering postage and handling.

3. MFJ Enterprises, Inc. will supply replacement parts free of charge for any MFJ product under warranty upon request. A dated proof of purchase and a **$8.00** personal check, cashiers check, or money order must be provided to cover postage and handling.

4. This warranty is **NOT** void for owners who attempt to repair defective units. Technical consultation is available by calling (662) 323-5869.

5. This warranty does not apply to kits sold by or manufactured by MFJ Enterprises, Inc.

6. Wired and tested PC board products are covered by this warranty provided **only the wired and tested PC board product is returned.** Wired and tested PC boards installed in the owner's cabinet or connected to switches, jacks, or cables, etc. sent to MFJ Enterprises, Inc. will be returned at the owner's expense un-repaired.

7. Under no circumstances is MFJ Enterprises, Inc. liable for consequential damages to person or property by the use of any MFJ products.

8. **Out-of-Warranty Service:** MFJ Enterprises, Inc. will repair any out-of-warranty product provided the unit is shipped prepaid. All repaired units will be shipped COD to the owner. Repair charges will be added to the COD fee unless other arrangements are made.

9. This warranty is given in lieu of any other warranty expressed or implied.

10. MFJ Enterprises, Inc. reserves the right to make changes or improvements in design or manufacture without incurring any obligation to install such changes upon any of the products previously manufactured.

11. All MFJ products to be serviced in-warranty or out-of-warranty should be addressed to **MFJ Enterprises, Inc., 300 Industrial Park Rd, Starkville, Mississippi 39759, USA** and must be accompanied by a letter describing the problem in detail along with a copy of your dated proof-of-purchase and a telephone number.

12. This warranty gives you specific rights, and you may also have other rights, which vary from state to state.

Rev 04/08/201

MFJ Enterprises, Inc
300 Industrial Park Rd.
Starkville, MS 39759
USA